EDiS-News 2/17

EDiS

EDiS Management Meeting

This year's Management Meeting took place on June 16th 2017 in Hannover at the premises of the Jäger Company.

After a very interesting look into the production of rubber products in Jäger's daughter company Artemis, the EDiS members around the table had extensive discussions on the possibilities and threats in our markets.

In particular the EDiS Management Meeting focused on the 4th Industrial Revolution with its digital impact on our business and personal life.

EDiS
Always ahead in Industrial Distribution

EDiS-News 2/17

Netherlands | Imbema Group

Change of generation for the management at IMBEMA

As of 1 April, Alexander Bloemers took over from Robert Bloemers as managing director of the Imbema Group. Robert Bloemers, from the second generation, was managing director from 1983 to 2017 and has now joined the Supervisory Board with immediate effect.

Imbema has developed as a stable family business under the leadership of Robert Bloemers. The Imbema Group is an industrial wholesale organisation offering a wide range of products and services to sectors including energy and water, the mobility market, construction and infrastructure, offshore and maritime and trade and industry. This spring, the Imbema Group celebrates its 70-year anniversary.

Alexander Bloemers on the ambitions of the Imbema Group: "Robert has built up a wonderful company. We have great foundations and an enthusiastic team to keep building on. It is an exciting time. Our challenge is to take the next step into the future with the organisation. We have seen a lot of changes in our world too and we need to adapt to the changing demand within the market and to digitalisation. We already have a lot of the resources that are required. More and more hardware devices can communicate with other devices and we will therefore be focusing on the development of new services."

www.imbemagroep.com

EDiS-News 2/17

Norway | TESS

TESS Hose Management training goes offshore

TESS Hose Management main instructor, Signe Dahl, has held many training courses on the mainland and on vessels at dock, but never offshore. In March all mandatory offshore training courses were completed and on the Monday the 3rd of April she left for the Troll-field on her very first offshore assignment. This is Signe Dahl's story about doing TESS Hose Management training in the midst of the hoses on Troll A:

Signe Dahl, THM Instructor at TESS on the job in the hose park on board Troll A.

I was welcomed on board by the platform manager and the HSE responsible, and got a tour of the premises. According to people on Troll A, it is compact and easy to navigate. For a green head there were a lot of impressions on the first day. With ocean on all sides it's hard to get your bearings. Even if Troll A is safely anchored to the sea bed on four massive shafts, it is anything but calm. Luckily its movement back and forth is so regular that seasickness did not become a problem!

TROLL A THE FIRST TO HAVE TESS HOSE MANAGEMENT TRAINING OFFSHORE

TESS has in cooperation with Statoil developed the course "Visual Inspection of hoses". Since December 2015 more than 90 Statoil-employees have completed this course. The participants learn to perform visual inspections of hoses, and which hoses to approve/not approve for further use.

In September 2016 Dagfinn Kvalsund and Frank Sæle from Troll A attended this course. During the course they were briefly informed about the TESS Hose Management system and how it efficiently stores the results of the inspections digitally. Dagfinn Kvalsund liked what he heard, and wanted more information. He contacted TESS and several THM-solutions were discussed. It soon became clear that Troll A wanted to manage all the aspects of their hose maintenance themselves. It was therefore decided to send the main THM-instructor offshore to ensure correct rigging of equipment and the best possible training.

www.tess.no

EDiS-News 2/17

Norway | TESS

HOSES ARE DIVIDED INTO CATEGORIES

To make full use of a hose-maintenance system, all hoses needs to be categorized and/or given information about physical position. On Troll A there are two main hose-categories; Utility hoses and Hoses with fixed positions. Utility hoses are handled differently from Hoses with fixed positions when it comes to the procedure for ordering new hoses.

The Utility hoses are moved around, they are exposed to great wear and tear, and therefore need to be replaced fairly often. You cannot give information about a Utility hose's position, but you can group them in accordance to medium/what they are used for. On Troll A the following categories were created: Utility Hydrocarbon, Utility Air, Utility Nitrogen, Utility Water and Breathing air. When a Utility hose is not approved for further use is scrapped. A new similar hose with a new ID-number is ordered. Hoses with fixed positions are less exposed to wear and tear and thus they need to be replaced less frequently. It is also of interest to track the history of each hose position. By keeping the same ID-number throughout the lifetime of equipment the hose is attached to, we can track the hose's history in the TESS Hose Management system. It is of high importance to give an exact position to these hoses, to make it easy to locate every hose individually.

YEARLY INSPECTION OF ALL HOSES

To fully utilize TESS Hose Management you need to set maintenance intervals. Each hose is given an inspection and replacement interval. Statoil strategy is to inspect all hoses once every year. After inspection they are marked with a cable tie with the current years color. Not approved hoses are scrapped, and new hoses are ordered. No fixed replacement interval has been set, therefore a long replacement interval (12 years) was set for all hoses.

LABELS WITH ID-NUMBERS

Every hose in the TESS Hose Management system needs to be labelled and registered with an individual ID-number. A special label printer was installed on Troll A, so now they can replace missing labels and print new labels for hoses not yet in the system. On the label you find the ID-number presented as a number and as a barcode for electronic scanning.

Each hose is registered with an individual ID-number.

www.tess.no

EDiS-News 2/17

Norway | TESS

THM CUSTOMERWEB

THM CustomerWEB is an online portal for the THM database. CustomerWEB gives you a complete overview of all hoses with multiple search options and a list of alerts; including "Failed inspections" and "Inspections overdue". In addition to this you can find detailed information about the hoses and their pressure test certificates.

THM WAPMAN

THM Wapman is an android smartphone that can be used offline for operational work on individual hoses. With this EX/ATEX approved unit you can perform hose inspections, report hose replacements and look up information on each hose. During the training the THM Wapman worked well for checking information and registering the results of inspections, but the scanning of barcodes with the camera did not live up to expectations. There were several reasons for this; including barcode printed to small and labels exposed to wear and tear making it impossible to scan. TESS will look into this immediately. Until this has been solved, one must type the ID-number manually or TESS can deliver RFID labelling that will eliminate this.

CONCLUSION

The label printer, THM CustomerWEB and THM Wapman worked very well. The internet accessibility on board Troll A was of a very good quality. Both of the courses participants were happy with the training and the functionality of the THM CustomerWEB and THM Mobile; with the exception of the barcode reader.

THM training offshore worked well, but it is time consuming and needs to be adjusted to the participant's daily routines. THM Instructor Signe Dahl learned just as much or more than the participants of the course, and she got a once in a lifetime experience!

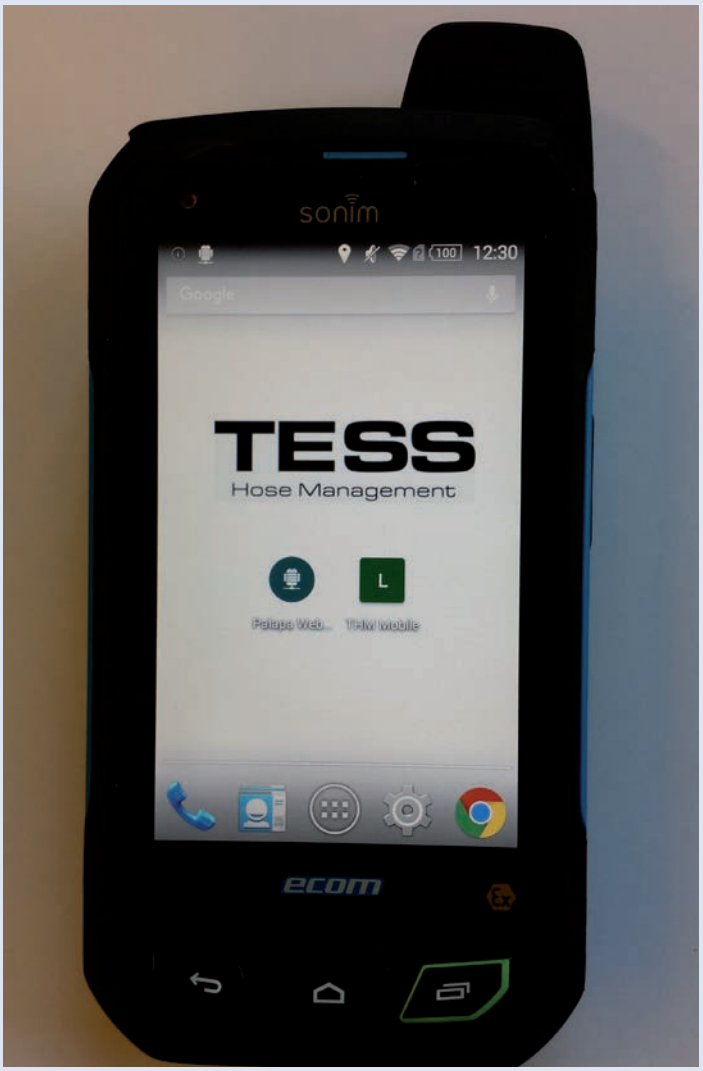

THM Wapman is an EX approved android smartphone for Offline operational work with hoses.

www.tess.no

EDiS-News 2/17

Germany | REIFF Technische Produkte

REIFF delivers abrasion-proof hose lines to casting house

One of REIFF Technical Products' customers is a casting house that manufactures its products via sand casting. The casting house needs highly abrasion-proof hose lines in order to prepare and carry the sand as regenerated sand is led to the mixers by hoses. The hoses which were used before did not last more than 4–6 months and needed to be replaced regularly. Each replacement of the 30 m hoses lasts 7 hours, each replacement recommends 10 workers and 2 lifting platforms.

REIFF helped to massively reduce the holding times by recommending and selling a special hose line, consisting of hose, gasket and flange, that perfectly fits the customers needs: Conti® Ultimate. This hose line has a very high quality in combination with a comparatively low price and massively reduces the amount of expensive replacements.

Details on the products used (not for sale individually, nominal diameters from 51 to 610 mm available):

CONTI® ULTIMATE System:
Highly flexible and lightweight
Typical Application & Features

- Heavy duty abrasion-resistant suction and discharge hose for the transfer of sand, gravel and slurries
- Safety factor of 3.2 times working pressure to burst
- Suitable for both suction and discharge operations
- Working temperature from -40°C to 80°C
- Smooth medium flow
- Reusable couplings
- No contact between transferred medium

Insight into the casting house

NEW Conti Orange Wear Indicator:
Features

- Allows the wear of the liner to be continuously monitored
- Helps to prevent unexpected production breakdowns
- Placed just beneath textile reinforcement

EDiS-News 2/17

Germany | REIFF Technische Produkte

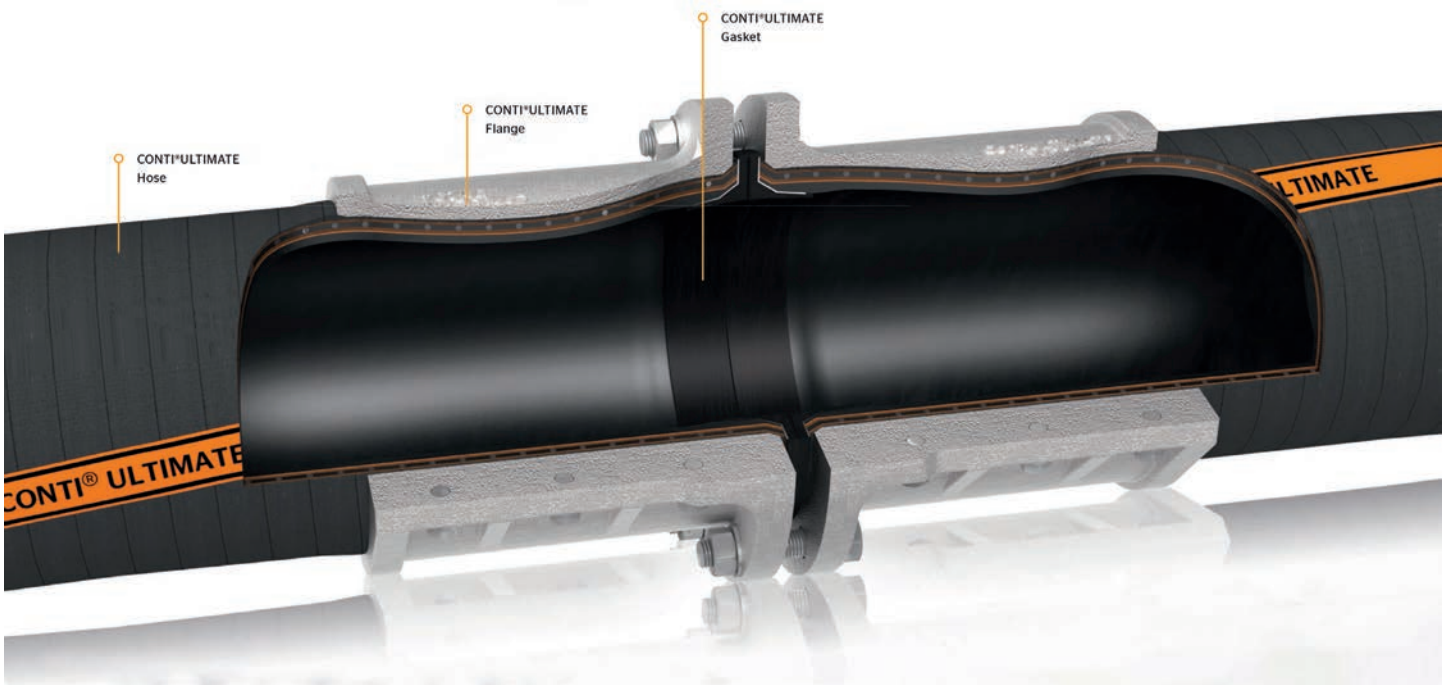

CONTI ® ULTIMATE Hose:

Features

- Liner material made of highly abrasion resistant NR compound with Conti Orange liner wear indicator
- High tensile textile reinforcement, embedded steel helix
- IR/BR cover resistant to abrasion, ozone and UV
- Very flexible, small bending radius
- Various production lengths available upon request

CONTI ® ULTIMATE Gasket:

Features

- Conical shape ensures ease of installation
- Reliable sealing protecting hose reinforcement from impact of the medium
- Improves connection between hose body and flange
- Rubber sealing with steel reinforcement

CONTI ® ULTIMATE Flange:

Features

- Suitable for both EN 1092-1 / ANSI 16.5B standards
- Made of high strength aluminium alloy
- Non-corrosive, good seawater resistance
- Robust design to withstand heavy duty operations

www.reiff-tp.de

EDiS-News 2/17

Austria | Haberkorn

Haberkorn ranks amongst Austria's top 3 employers

Recognised as a "Great Place to Work" for the fifth time in a row

Vienna, Wolfurt: For the fifth time in succession, Vorarlberg's flagship enterprise asked the independent Great Place to Work Institute to carry out an employee survey on its behalf. Over 80% of the workforce responded to the 63 questions on the quality of Haberkorn as an employer.

Every year, the Great Place to Work Institute presents awards to the best employers in Austria. The assessment criteria for the jury are fairness, credibility, respect, teamwork and pride.

At the award ceremony in Vienna on 15 March, Haberkorn was presented with the internationally recognised Great Place to Work Award as one of Austria's top employers. Haberkorn ranked in an excellent third place out of 21 participants in the category X-Large Companies with over 500 employees.

"Mutual esteem is something we practise; it's not just a concept contained in our mission statement. For us, this award is confirmation that we are on the right track," says HR manager Christoph Winder. "We shall use the results in our ongoing efforts to increase employee satisfaction," he adds.

As well as being a reliable and secure employer, Haberkorn offers a host of advantages for its employees. Everyone benefits from the commercial success of the business through a voluntary profit-sharing scheme. The company has developed a programme aimed at promoting health in the workplace, which includes aspects of both mental and physical health, and has created a platform for all further training activities with the Haberkorn Academy.

Third place for Haberkorn in the Great Place to Work category X-Large Companies (from left to right: Doris Palz, Managing Director Great Place to Work; Christoph Winder, Gabriela Fila, Angelika Alfare, Doris Faltner and Wolfgang Blum – all Haberkorn.

Haberkorn is not just a great place to work but also a great place to learn. The Haberkorn apprenticeship, based on an ingenious rotational training programme, combines solid technical know-how and commercial knowledge. This makes the training period doubly fascinating for Haberkorn apprentices.

Whether a new recruit or an experienced employee – every member of the Haberkorn team is valued and encouraged, as borne out by another study: over 92% of employees state that "overall I have to say that this is a very good place to work".

www.haberkorn.com

EDiS-News 2/17

Denmark | S&K Group A/S

Linatex cast nylon sheaves are placed on a wide variety of lifting equipment. They often replace sheaves made of cast iron or steel. Today our sheaves can be found on nearly any type of crane including gantry, tower, rough terrain, crawler, truck and pedestal cranes. They are also used, in equipment for the wire drawing and cable stranding industries, on forklifts, telehandlers, drill rigs and in many other mechanical systems.

Cast Nylon Sheaves for the Heavy Equipment Industry extend Wire Rope Life

Wire rope (wire cable) is an important and highly stressed component in material handling equipment. The useful lifetime of wire rope is mostly determined by fatigue, Hertzian pressure between wire rope and sheave, and external conditions such as line pull, sheave diameter, groove profile and sheave material.

In contrast to most other machine components wire rope must be replaced before it fails. In order to extend wire rope life, sheaves or sheave grooves made of cast nylon are used. Sheaves are very wear resistant and do not stress the outer strands of the rope nearly as much as steel sheaves. Standard wire rope rests in the groove of a steel sheave on point contacts only, resulting in high specific loads between the outer wires of the rope and the groove. Premature wire rope failure due to the breaking of individual wires in the outer strands can occur. This does not happen with sheaves made of cast nylon.

The elasticity of our sheaves results in a larger contact area between wire rope and sheave groove. The specific loading is greatly reduced and the wire rope is under less stress. Linatex sheaves provide a cushion in the groove contact area. The load bearing contact area on our sheave is 10 times larger than on a steel sheave.

Wear resistance, reduced specific loading and elasticity make our sheaves extend the life of the wire rope by 2500 mm sheave for the offshore industry.

We can help you, with the engineering part – and the needed certificates for your area.

Our finite element method, FEM- will provide you with the needed safety.

www.skg.dk

EDiS-News 2/17

Netherlands | Imbema Group

SIREX® PE foam helps protect search and rescue helicopters against corrosion

A reliable solution using dimensionally stable foam

One of the tasks of the Belgian and Dutch Royal Air Force is to carry out search and rescue operations (SAR) in the North Sea. Belgian and Dutch NH90 helicopters carry out rescue operations off the Belgian and Dutch coast. In order to ensure that people who are rescued from drowning can be transported safely and to stop seawater from getting into the helicopter, Imbema SMT developed a drip pan made of PE foam.

Corrosive seawater

When a diver rescues a person from drowning in the sea, a lot of seawater is brought on board the helicopter. If that seawater was allowed to flow freely, it would corrode metal and composite components. It could also affect vital control electronics (avionics). For that reason, the person rescued from drowning and the diver are set down in a sail maker's drip pan which contains the corrosive seawater.

Foam edge

It was important for the edges around the drip pan to retain their shape, even if subjected to pressure, for example. An edge made of rigid unforgiving material was therefore not an option. The decision was made to call in the experts from Imbema SMT. They developed a soft but dimensionally stable edge made of SIREX® PE foam.

Compliance with strict requirements from the aviation sector

Besides being dimensionally stable, the solution also had to comply with the strict requirements that apply in the military aviation sector, such as fire requirements. The edge made of SIREX® PE foam met all the requirements and was awarded the certification required. The foam edges are now being used in SAR helicopters.

www.imbemagroep.com

EDiS-News 2/17

Spain | Gasso Equipments S.A.

GASSOFLEX CRYOGENIC HOSES

Gasso Equipments has recently achieved Certification EN 13766: 2010 Classes A and B Types 1 and 2 for Gassoflex composite hoses.

With this certification Gasso completes the range of Cryogenic hoses for both LPG (– 50 °C) and LNG (–196 ° C) covering the low temperature applications of the gas industry

The certification has been obtained for all diameters from 1 "to 10" and are available in the different pressures demanded by this market 10, 14, 21 and 25 bar.

Robust yet flexible design makes Gassoflex hoses an excellent alternative to heavy rubber cryogen hoses. They are also an option highly appreciated by users who until now had used corrugated stainless hoses due to the absence of external braid that causes discomfort during handling.

All the necessary tests and tests necessary to obtain the Certification In 13766: 2010 could be realized in our own internal laboratory located in our facilities of Barcelona where they were later accredited by DNV GL.

The special design of the fittings for these hoses, manufactured entirely in our factory together with the assembly by our specialists make that all Gassoflex hoses for Cryogenic are supplied with the test certificate that assures a perfect operation.

This has been the success of several years of intense work by our engineers developing the ideal hose for Cryogenic and with the most advanced features of the market.

For any query or request please contact our technical – commercial department at gasso@gasso.com.

www.gasso.com